POLYLUX®

Step-up and **Step-down** Three-phase Isolation Transformers

polylux.com

POLYLUX®

Technology and Quality

MORE THAN 50 YEARS' EXPERIENCE

We at POLYLUX help our customers improve their premises by providing them with high quality, reliable, safe products and solutions that can be adapted to all their needs for diverse industrial applications.

POLYLUX has extensive experience in the electrical sector, providing tailored solutions and implementing improvements to its products in order to adapt to market demands.

Our premises of over 20,000 m^2 include a production area of 12,000 m^2, an office area of 2,000 m^2 and the rest is used for services.

What makes our products different from others? Continuous improvement and quality.

Dip varnishing. + Drying in a high compactation furnace
These two processes prevent noise and vibrations in the operation of our products. This achieves increased isolation and additional protection against damp.

Flame retardant resin encapsulation.
This process gives our products high resistance to thermal contrasts and complies with the UL94 V0 plastics flammability standard.

All the connections are made of copper.
We use welding and joining processes that have certified, approved materials.

Magnetic cores.
We use magnetic cores with different properties and construction formats to achieve high efficiency.

Flexibility in the final product construction.
We adapt to all installation needs and design enclosures with different IP grades. Certified IP23 and IP65 enclosures.

Product testing.
Automatic checks and tests on ALL the products, in accordance with the standards.

Customer focus.
Technical support team that offers advice on product installation and maintenance.

Step-up and **Step-down** Three-phase Isolation Transformers

POLYLUX presents the new range of Three-phase Isolation Transformers TTU and TTD, designed for continuous operation at maximum output 365 days a year. This guarantees power is supplied to the installation or equipment they supply.

Definition and applications

- The main application of the TTU transformers is the isolation of circuits, with the possibility of increasing the voltage from 230V to 400V.
- The main application of the TTD transformers is the isolation of circuits, with the possibility of reducing the voltage from 400 to 230V.
- In installations with a certain level of electrial noise, the TT series helps improve the electrical network quality in secondary.
- Changing the neutral system of an installation.

Manufacturing characteristics

- All the transformers are dipped in anti-flash varnish and the compacted in the furnace. This process increases the insulation grade, reduces noise and provides anti-moisture, waterproofed protection.
- All the conection terminals are made of cooper. For transformers with aluminium coils, internal bimetallic AL-CU connections are made by welding with filling and sealing material to ensure a safe, long lasting connection.
- The high power transformers are manufactured with format cores and low loss properties, thus contributing to improving performance.
- All the transformers are checked automatically one by one an the compliance test report is created in accordance with the corresponding standard.

TTU SERIES

Isolation · Input **230 V** · Output **400 V** +N

Recommendation for selecting the best transformer in terms of use and installation location

Main compliance properties based on mode	Encapsulated in resin	IP00 Air	Oil
Non-flammable	✔	✘	✘
Self-extinguishing.	✔	✘	✘
No safety measures against the risk of explosion	✔	✔	✘
No special installation conditions	✔	✔	✘
Protected against damp, saline and corrosive environments	✔	✘	✔
Greater resistance to overload and transient harmonics	✔	✘	✘
No maintenance	✔	✔	✘
No risk of contamination	✔	✔	✘

Considerations

- The IP00 (air) can be installed in control cabinets with all the necessary protections and in dry places, which is more economical.
- Both models (encapsulated and IP00) can be protected with metallic enclosures up to IP65.
- In addition, the **ECOLOGICAL** transformer can be manufactured in both models, with different properties such as lower consumption, thus achieving fast amortisation.
- The transformer with the best properties is the transformer encapsulated in fire retardant resin.

TTUX

· IP00 protection rating.
· Power from 0.63 kVA to 1000 kVA.
· Total impregnated in anti-flash varnish.
· Hoisting elements included.

TTUW

· IP23 rating (IK08).
· Power from 0.63 kVA to 1000 kVA.
· Metal box painted with RAL7035 polyester resin.
· High resistance to corrosion.
· Hoisting elements included.
· Detachable top and front cover.
· Cable outlet with cable gland.

TTUZ

· IP54 rating / 65 (IK10).
· Power from 0.63 kVA to 1000 kVA.
· Metal box painted with RAL7035 polyester resin.
· High resistance to corrosion.
· Hoisting elements included.
· Detachable top cover.
· Stuffing box cover for cable input depending on installation needs.
· With silentblock..

TTU SERIES

Isolation · Input **230 V** · Output **400 V** + N

Technical features - standard model

Standard voltage	**Input 230 V // Output 400 V and N.**
Standard frequency	**50-60 Hz**
Connection unit	**YynO**
Windings	**Class HC-200 ºC**
Insulators	**Class F - 155 ºC ≤ 31,5 kVA (25 kVA TTZ)** **Class H - 180 ºC ≥ 40 kVA (31,5 kVA TTZ)** *More information in Technical Appendix (T.A.1)
Safety class	**I**
Altitude	**1000 m**
Enclosure colour	**RAL 7035**
IP rating	**IP00 (TTX)** **IP23 (TTW)** **IP54 / 65 (TTZ)**
IK rating	**IK08 (TTW)** **IK10 (TTZ)**
Paint class (ISO 12944)	**C3 (TTW)** **C4 (TTZ)**
Room temperature	**45 ºC**
Standards	**IEC/EN 61558, CE hasta 31,5 kVA** **IEC/EN 60076, CE a partir de 40 kVA**
Test voltage	**3 kV (1 min, 50 Hz)**
Inrush	**< 12 In**
Ucc	**≤ 4 %**
K factor	**4**
Operation	**Continuous**
Cooling	**AN (TTUX) - ANAN (TTUW / TTUZ)**
Hoisting accessories	Hoisting elements included.

Electrical diagram

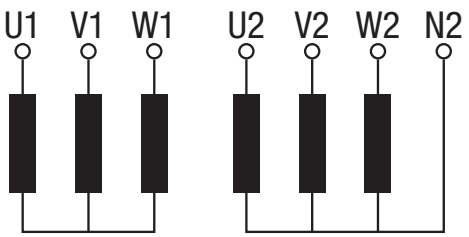

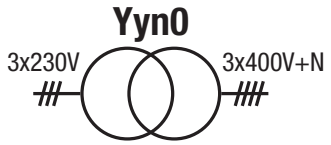

Theoretical data - standard model

Power kVA	Reference	Insulation class	Current A		Protections A		Noise dB	Cable gland	
			Input	Output	Input	Output		ø max. (mm)	Quantity
TTUX									
0,63	**TTUX0.63**	F	1,6	0,9	4 (D/aM)	1 (C/gG)	≤45	-	-
1	**TTUX1**	F	2,5	1,4	6 (D/aM)	1.6 (C/gG)	≤45	-	-
2	**TTUX2**	F	5,0	2,9	10 (D/aM)	3 (C/gG)	≤45	-	-
2,5	**TTUX2.5**	F	6,3	3,6	16 (D/aM)	3 (C/gG)	≤45	-	-
3,15	**TTUX3.15**	F	7,9	4,6	16 (D/aM)	4 (C/gG)	≤45	-	-
4	**TTUX4**	F	10,0	5,8	20 (D/aM)	5 (C/gG)	≤45	-	-
5	**TTUX5**	F	12,6	7,2	32 (D/aM)	6 (C/gG)	≤45	-	-
6,3	**TTUX6.3**	F	15,8	9,1	40 (D/aM)	10 (C/gG)	≤45	-	-
8	**TTUX8**	F	20,1	11,6	50 (D/aM)	12 (C/gG)	≤45	-	-
10	**TTUX10**	F	25,1	14,5	63 (D/aM)	16 (C/gG)	≤45	-	-
12,5	**TTUX12.5**	F	31,4	18,1	80 (D/aM)	16 (C/gG)	≤45	-	-
16	**TTUX16**	F	40,2	23,1	100 (D/aM)	20 (C/gG)	≤45	-	-
20	**TTUX20**	F	50,2	28,9	125 (D/aM)	25 (C/gG)	≤45	-	-
25	**TTUX25**	F	62,8	36,1	160 (D/aM)	32 (C/gG)	≤45	-	-
31,5	**TTUX31.5**	F	79,1	45,5	160 (D/aM)	40 (C/gG)	≤45	-	-
40	**TTUX40**	H	100	57,8	200 (D/aM)	50 (C/gG)	≤55	-	-
50	**TTUX50**	H	126	72,3	300 (D/aM)	63 (C/gG)	≤55	-	-
63	**TTUX63**	H	158	91	400 (D/aM)	80 (C/gG)	≤55	-	-
80	**TTUX80**	H	201	116	500 (D/aM)	100 (C/gG)	≤55	-	-
100	**TTUX100**	H	251	145	600 (D/aM)	125 (C/gG)	≤55	-	-
125	**TTUX125**	H	314	181	800 (D/aM)	160 (C/gG)	≤55	-	-
160	**TTUX160**	H	402	231	800 (D/aM)	200 (C/gG)	≤55	-	-
200	**TTUX200**	H	502	289	1000 (D/aM)	250 (C/gG)	≤55	-	-
250	**TTUX250**	H	628	361	1600 (D/aM)	300 (C/gG)	≤65	-	-
315	**TTUX315**	H	791	455	1600 (D/aM)	400 (C/gG)	≤65	-	-
400	**TTUX400**	H	1004	578	2000 (D/aM)	500 (C/gG)	≤65	-	-
500	**TTUX500**	H	1255	723	2600 (D/aM)	630 (C/gG)	≤65	-	-
630	**TTUX630**	H	1581	910	3000 (D/aM)	800 (C/gG)	≤65	-	-
800	**TTUX800**	H	2008	1156	4000 (D/aM)	1000 (C/gG)	≤65	-	-
1000	**TTUX1000**	H	2510	1445	5000 (D/aM)	1250 (C/gG)	≤65	-	-

TTU SERIES

Isolation · Input **230 V** · Output **400 V** + N

Theoretical data - standard model

Power kVA	Reference	Insulation class	Current A		Protections A		Noise dB	Cable gland	
			Input	Output	Input	Output		ø max. (mm)	Quantity
TTUW									
0,63	**TTUW0.63**	F	0,9	0,9	2 (D/aM)	1 (C/gG)	≤45	14	2
1	**TTUW1**	F	1,4	1,4	3 (D/aM)	1.6 (C/gG)	≤45	14	2
2	**TTUW2**	F	2,9	2,9	6 (D/aM)	3 (C/gG)	≤45	14	2
2,5	**TTUW2.5**	F	3,6	3,6	6 (D/aM)	3 (C/gG)	≤45	18	2
3,15	**TTUW3.15**	F	4,6	4,6	10 (D/aM)	4 (C/gG)	≤45	18	2
4	**TTUW4**	F	5,8	5,8	10 (D/aM)	5 (C/gG)	≤45	18	2
5	**TTUW5**	F	7,2	7,2	16 (D/aM)	6 (C/gG)	≤45	18	2
6,3	**TTUW6.3**	F	9,1	9,1	20 (D/aM)	10 (C/gG)	≤45	25	4
8	**TTUW8**	F	11,6	11,6	25 (D/aM)	12 (C/gG)	≤45	25	4
10	**TTUW10**	F	14,5	14,5	32 (D/aM)	16 (C/gG)	≤45	32	4
12,5	**TTUW12.5**	F	18,1	18,1	32 (D/aM)	16 (C/gG)	≤45	32	4
16	**TTUW16**	F	23,1	23,1	40 (D/aM)	20 (C/gG)	≤45	32	4
20	**TTUW20**	F	28,9	28,9	50 (D/aM)	25 (C/gG)	≤45	32	4
25	**TTUW25**	F	36,1	36,1	63 (D/aM)	32 (C/gG)	≤45	32	4
31,5	**TTUW31.5**	F	45,5	45,5	80 (D/aM)	40 (C/gG)	≤45	32	4
40	**TTUW40**	H	57,8	57,8	100 (D/aM)	50 (C/gG)	≤55	32	8
50	**TTUW50**	H	72,3	72,3	125 (D/aM)	63 (C/gG)	≤55	32	8
63	**TTUW63**	H	91	91	160 (D/aM)	80 (C/gG)	≤55	32	8
80	**TTUW80**	H	116	116	200 (D/aM)	100 (C/gG)	≤55	32	8
100	**TTUW100**	H	145	145	250 (D/aM)	125 (C/gG)	≤55	32	8
125	**TTUW125**	H	181	181	400 (D/aM)	160 (C/gG)	≤55	44	8
160	**TTUW160**	H	231	231	500 (D/aM)	200 (C/gG)	≤55	44	8
200	**TTUW200**	H	289	289	630 (D/aM)	250 (C/gG)	≤55	44	8
250	**TTUW250**	H	361	361	800 (D/aM)	300 (C/gG)	≤65	44	8
315	**TTUW315**	H	455	455	1000 (--/aM)	400 (C/gG)	≤65	44	8
400	**TTUW400**	H	578	578	1250 (--/aM)	500 (C/gG)	≤65	44	8
500	**TTUW500**	H	723	723	1500 (--/aM)	630 (C/gG)	≤65	44	8
630	**TTUW630**	H	910	910	2000 (--/aM)	800 (C/gG)	≤65	44	8
800	**TTUW800**	H	1156	1156	2500 (--/aM)	1000 (C/gG)	≤65	44	8
1000	**TTUW1000**	H	1445	1445	3000 (--/aM)	1250 (C/gG)	≤65	44	8
TTUZ									
0,63	**TTUZ0.63**	F	0,9	0,9	2 (D/aM)	1 (C/gG)	≤45	10 - 14	2
1	**TTUZ1**	F	1,4	1,4	3 (D/aM)	1.6 (C/gG)	≤45	10 - 14	2
2	**TTUZ2**	F	2,9	2,9	6 (D/aM)	3 (C/gG)	≤45	10 - 14	2
2,5	**TTUZ2.5**	F	3,6	3,6	6 (D/aM)	3 (C/gG)	≤45	18 - 25	2
3,15	**TTUZ3.15**	F	4,6	4,6	10 (D/aM)	4 (C/gG)	≤45	18 - 25	2
4	**TTUZ4**	F	5,8	5,8	10 (D/aM)	5 (C/gG)	≤45	18 - 25	2
5	**TTUZ5**	F	7,2	7,2	16 (D/aM)	6 (C/gG)	≤45	18 - 25	2
6,3	**TTUZ6.3**	F	9,1	9,1	20 (D/aM)	10 (C/gG)	≤45	18 - 25	2
8	**TTUZ8**	F	11,6	11,6	25 (D/aM)	12 (C/gG)	≤45	18 - 25	2
10	**TTUZ10**	F	14,5	14,5	32 (D/aM)	16 (C/gG)	≤45	22 - 32	2
12,5	**TTUZ12.5**	F	18,1	18,1	32 (D/aM)	16 (C/gG)	≤45	22 - 32	2
16	**TTUZ16**	F	23,1	23,1	40 (D/aM)	20 (C/gG)	≤45	22 - 32	2
20	**TTUZ20**	F	28,9	28,9	50 (D/aM)	25 (C/gG)	≤45	22 - 32	2
25	**TTUZ25**	F	36,1	36,1	63 (D/aM)	32 (C/gG)	≤45	22 - 32	2
31,5	**TTUZ31.5**	F	45,5	45,5	80 (D/aM)	40 (C/gG)	≤45	22 - 32	2
40	**TTUZ40**	H	57,8	57,8	100 (D/aM)	50 (C/gG)	≤55	22 - 32	2
50	**TTUZ50**	H	72,3	72,3	125 (D/aM)	63 (C/gG)	≤55	22 - 32	2
63	**TTUZ63**	H	91	91	160 (D/aM)	80 (C/gG)	≤55	22 - 32	2
80	**TTUZ80**	H	116	116	200 (D/aM)	100 (C/gG)	≤55	22 - 32	2
100	**TTUZ100**	H	145	145	250 (D/aM)	125 (C/gG)	≤55	22 - 32	2
125	**TTUZ125**	H	181	181	400 (D/aM)	160 (C/gG)	≤55	34 - 44	2
160	**TTUZ160**	H	231	231	500 (D/aM)	200 (C/gG)	≤55	34 - 44	2
200	**TTUZ200**	H	289	289	630 (D/aM)	250 (C/gG)	≤55	34 - 44	2
250	**TTUZ250**	H	361	361	800 (D/aM)	300 (C/gG)	≤65	34 - 44	2
315	**TTUZ315**	H	455	455	1000 (--/aM)	400 (C/gG)	≤65	34 - 44	2
400	**TTUZ400**	H	578	578	1250 (--/aM)	500 (C/gG)	≤65	34 - 44	2
500	**TTUZ500**	H	723	723	1500 (--/aM)	630 (C/gG)	≤65	34 - 44	2
630	**TTUZ630**	H	910	910	2000 (--/aM)	800 (C/gG)	≤65	34 - 44	2
800	**TTUZ800**	H	1156	1156	2500 (--/aM)	1000 (C/gG)	≤65	34 - 44	2
1000	**TTUZ1000**	H	1445	1445	3000 (--/aM)	1250 (C/gG)	≤65	34 - 44	2

TTU SERIES

Isolation · Input **230 V** · Output **400 V** + N

Measurements

Power kVA	Reference	External dimensions mm			Fastening elements mm			Weight kg
		A	B	C	D	E	Ø	
TTUX								
0,63	**TTUX0.63**	150	94	178	66	125	6	5,9
1	**TTUX1**	180	94	203	76	150	6	9,5
2	**TTUX2**	240	145	253	125	200	9	20
2,5	**TTUX2.5**	300	124	303	115	250	9	23,9
3,15	**TTUX3.15**	300	134	303	125	250	9	27,4
4	**TTUX4**	300	154	303	145	250	9	36
5	**TTUX5**	300	164	303	155	250	9	40,4
6,3	**TTUX6.3**	360	144	353	122	300	11	55
8	**TTUX8**	360	164	353	142	300	11	67
10	**TTUX10**	420	170	419	136	350	11	78
12,5	**TTUX12.5**	420	190	419	156	350	11	94
16	**TTUX16**	480	250	480	144	400	11	105
20	**TTUX20**	480	270	480	164	400	11	125
25	**TTUX25**	480	290	480	184	400	11	145
31,5	**TTUX31.5**	480	310	480	204	400	11	162
40	**TTUX40**	670	280	615	170	426	13	191
50	**TTUX50**	670	300	615	190	426	13	233
63	**TTUX63**	670	320	690	210	426	13	277
80	**TTUX80**	670	340	690	230	426	13	320
100	**TTUX100**	670	360	690	250	426	13	368
125	**TTUX125**	785	550	880	460	472	17	462
160	**TTUX160**	785	550	880	460	472	17	560
200	**TTUX200**	785	550	880	460	472	17	660
250	**TTUX250**	1016	550	1080	460	690	17	808
315	**TTUX315**	1070	550	1220	460	690	17	1000
400	**TTUX400**	1070	550	1220	460	690	17	1092
500	**TTUX500**	1300	550	1350	460	800	17	1658
630	**TTUX630**	1300	600	1350	460	800	17	2000
800	**TTUX800**	1300	700	1350	600	800	17	2413
1000	**TTUX1000**	1300	800	1350	600	800	17	2993

Power kVA	Reference	External dimensions mm			Fastening elements mm			Weight kg
		A	B	C	D	E	Ø	
TTUW								
0,63	**TTUW0.63**	194	175	220	165	100	6	7,6
1	**TTUW1**	240	190	250	180	150	6	13,2
2	**TTUW2**	315	230	315	205	200	6	24,8
2,5	**TTUW2.5**	385	260	384	245	250	6	28,8
3,15	**TTUW3.15**	385	260	384	245	250	6	32,8
4	**TTUW4**	385	260	384	245	250	6	40,8
5	**TTUW5**	385	260	384	245	250	6	45,2
6,3	**TTUW6.3**	458	340	500	300	300	12	61
8	**TTUW8**	458	340	500	300	300	12	73
10	**TTUW10**	528	418	644	375	345	12	89
12,5	**TTUW12.5**	528	418	644	375	345	12	106
16	**TTUW16**	597	415	710	375	345	12	117
20	**TTUW20**	597	415	710	375	345	12	137
25	**TTUW25**	597	415	710	375	345	12	157
31,5	**TTUW31.5**	597	415	710	375	345	12	174
40	**TTUW40**	795	550	970	500	415	12	237
50	**TTUW50**	795	550	970	500	415	12	279
63	**TTUW63**	795	550	970	500	415	12	323
80	**TTUW80**	795	550	970	500	415	12	366
100	**TTUW100**	795	550	970	500	415	12	414
125	**TTUW125**	970	670	1250	582	470	18	514
160	**TTUW160**	970	670	1250	582	470	18	612
200	**TTUW200**	970	670	1250	582	470	18	754
250	**TTUW250**	1200	760	1555	672	690	18	855
315	**TTUW315**	1200	760	1555	672	690	18	1093
400	**TTUW400**	1200	760	1555	672	690	18	1185
500	**TTUW500**	1530	1000	1880	900	800	20	1808
630	**TTUW630**	1530	1000	1880	900	800	20	2149
800	**TTUW800**	1530	1000	1880	900	800	20	2563
1000	**TTUW1000**	1530	1000	1880	900	800	20	3143

TTUX IP00

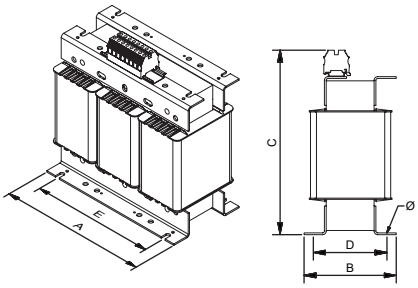

From 0,63 kVA to 12,5 kVA

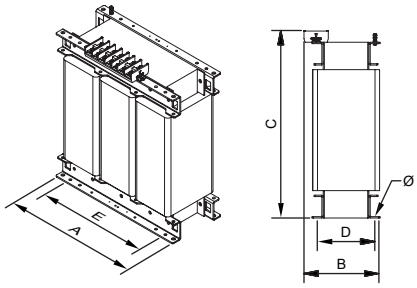

From 16 kVA to 200 kVA

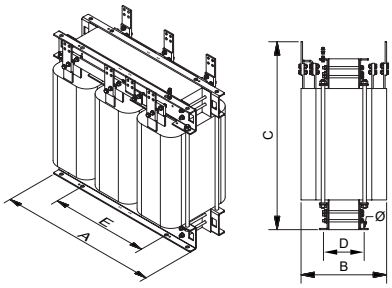

From 250 kVA

TTUW IP23

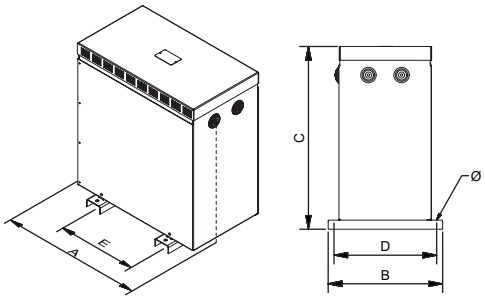

From 0,63 kVA to 31,5 kVA

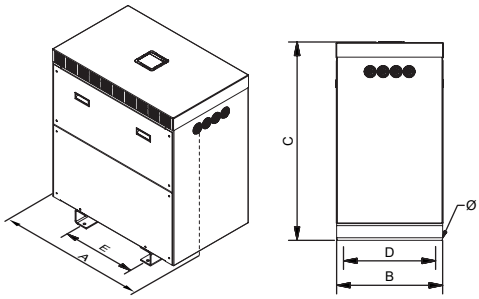

From 40 kVA

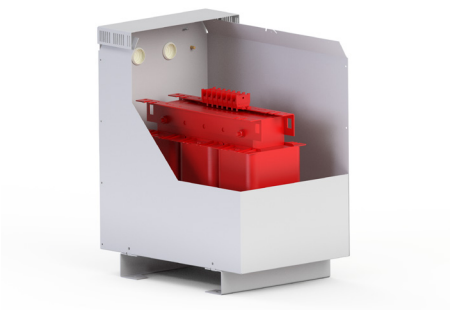

Sectioned

TTU SERIES

Isolation · Input **230 V** · Output **400 V** + N

Measurements

Power kVA	Reference	External dimensions mm			Fastening elements mm			Weight kg
		A	B	C	D	E	Ø	
TTUZ								
0,63	**TTUZ0.63**	330	284	463	230	200	11	19,5
1	**TTUZ1**	330	284	463	230	200	11	24
2	**TTUZ2**	510	362	689	320	250	11	37
2,5	**TTUZ2.5**	510	362	689	320	250	11	40
3,15	**TTUZ3.15**	510	362	689	320	250	11	57
4	**TTUZ4**	510	362	689	320	250	11	61
5	**TTUZ5**	510	362	689	320	250	11	76
6,3	**TTUZ6.3**	510	362	689	320	250	11	87,5
8	**TTUZ8**	694	413	764	370	350	11	118
10	**TTUZ10**	694	413	764	370	350	11	134
12,5	**TTUZ12.5**	694	413	764	370	350	11	145
16	**TTUZ16**	694	413	764	370	350	11	165
20	**TTUZ20**	694	413	764	370	350	11	185
25	**TTUZ25**	694	413	764	370	350	11	202
31,5	**TTUZ31.5**	694	413	764	370	350	11	220
40	**TTUZ40**	890	560	1148	520	426	13	251
50	**TTUZ50**	890	560	1148	520	426	13	295
63	**TTUZ63**	890	560	1148	520	426	13	340
80	**TTUZ80**	890	560	1148	520	426	13	383
100	**TTUZ100**	890	560	1148	520	426	13	433
125	**TTUZ125**	972	740	1480	660	470	17	551
160	**TTUZ160**	972	740	1480	660	470	17	628
200	**TTUZ200**	972	740	1480	660	470	17	797
250	**TTUZ250**	1394	870	1762	810	690	17	1186
315	**TTUZ315**	1394	870	1762	810	690	17	1278
400	**TTUZ400**	1394	870	1762	810	690	17	1933
500	**TTUZ500**	1640	1226	1770	1110	800	17	2275
630	**TTUZ630**	1640	1226	1770	1110	800	17	2688
800	**TTUZ800**	1640	1226	1770	1110	800	17	3268
1000	**TTUZ1000**	1640	1226	1770	1110	800	17	3848

TTUZ IP54 / 65

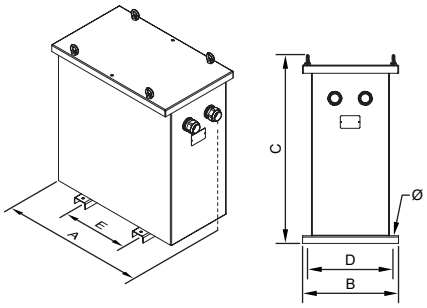

+ info. www.polylux.com
POLYLUX Information is subject to change

TTU SERIES

Isolation · Input **230 V** · Output **400 V** + N

On-request manufacturing options (please see prices)

Power	**From 0.15 kVA to 1000 kVA**
Voltage	**From 1 V to 12 kV**
Windings	**Copper or aluminium**
Frequency	**From 50 Hz to 400 Hz**
Connection unit	**Yyn0, Dyn11, Dd0, Dy1, Dyn5, YNd1/5/11... (See Technical Appendix T.A.2)**
IP rating	**IP00, IP20, IP23, IP31, IP42, IP54, IP55 and IP65**
IK rating	**IK08 and IK10**
Room temperature	**Up to 60 ºC**
Locks	**Screw, key**
Test voltage	**Up to 28 kV**
Short circuit voltage	**From 2% to 9%**
Losses	**Low losses, ecological**
Operation	**Intermittent, continuous**
Cooling	**Natural, forced ventilation**
Electrostatic shield	**Up to three shields**
Safety class	**I, II**
Altitude	**Up to 4000 m**
Protections	**In both primary and secondary (figure 1)**
Temperature sensors	**PT100 (figure 2), PTC (figure 3) or bimetallic**
Temperature control	**Temperature control station (4xPT100) (figure 4), PTC thermal relays (3xPTC / 6xPTC)**
Network analyser	**(Figure 5)**
Anti condensation system	**Higrostat**
Heating system	**Heating elements**
External protection	**Anti-flash varnish, resin encapsulated, metal or stainless steel enclosure**
Transportation and hoisting	**Wheels (figure 6), lifting points**
Paint	**C3, C4, C5, different RAL**
Feature plate	**High generation polymer or stainless steel (figure 7)**
Anti vibration system	**Silentblock**
Adjustment	**-10%; -7.5%; -5%; -2.5%; +2.5%; +5%; +7.5%; +10% With bridges (figure 8) or selector (figure 9)**
Certified	**CE, DNV-GL, BV, UL (insulation) and POLYLUX laboratory**
Climate class / environment / fire	**Up to C2-E2-F1**

Figure 1

Figure 2

Figure 3

Figure 4

Figure 5

Figure 6

Figure 7

Figure 8

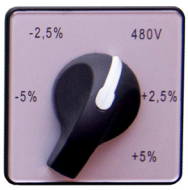

Figure 9

TTU SERIES

Isolation · Input **230 V** · Output **400 V** + N

Plastic label up to 31,5 kVA:

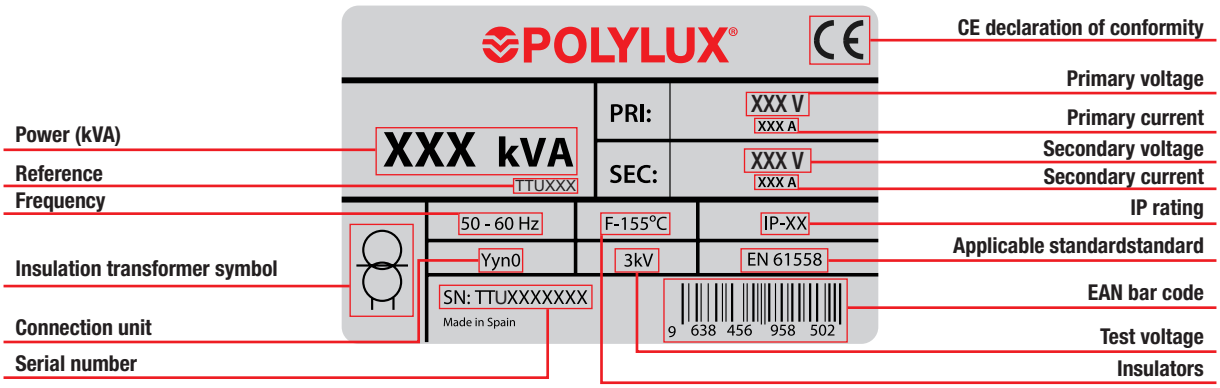

Stainless steel label from 40 kVA:

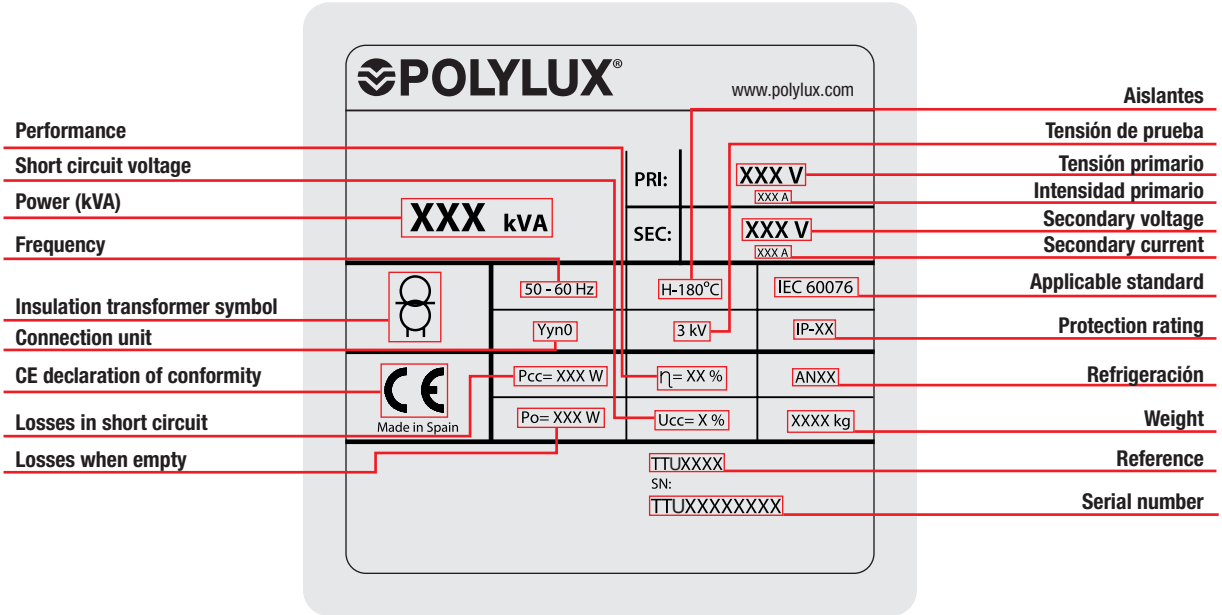

+ info. www.polylux.com
POLYLUX Information is subject to change

TTD SERIES

Isolation · Input **400 V** · Output **230 V** + N

Recommendation for selecting the best transformer in terms of use and installation location

Main compliance properties based on model	Encapsulated in resin	IP00 Air	Oil
Non-flammable	✔	✘	✘
Self-extinguishing.	✔	✘	✘
No safety measures against the risk of explosion	✔	✔	✘
No special installation conditions	✔	✔	✘
Protected against damp, saline and corrosive environments	✔	✘	✔
Greater resistance to overload and transient harmonics	✔	✘	✘
No maintenance	✔	✔	✘
No risk of contamination	✔	✔	✘

Considerations

- The IP00 (air) can be installed in control cabinets with all the necessary protections and in dry places, which is more economical.
- Both models (encapsulated and IP00) can be protected with metallic enclosures up to IP65.
- In addition, the **ECOLOGICAL** transformer can be manufactured in both models, with different properties such as lower consumption, thus achieving fast amortisation.
- The transformer with the best properties is the transformer encapsulated in fire retardant resin. .

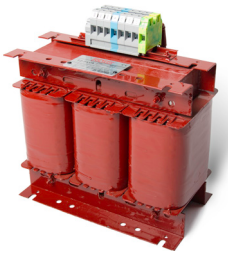

TTDX

· IP00 protection rating.
· Power from 0.63 kVA to 1000 kVA.
· Total impregnated in anti-flash varnish.
· Hoisting elements included.n.

TTDW

· IP23 rating (IK08).
· Power from 0.63 kVA to 1000 kVA.
· Metal box painted with RAL7035 polyester resin.
· High resistance to corrosion.
· Hoisting elements included.
· Detachable top and front cover.
· Cable outlet with cable gland..

TTDZ

· IP54 rating / 65 (IK10).
· Power from 0.63 kVA to 1000 kVA.
· Metal box painted with RAL7035 polyester resin.
· High resistance to corrosion.
· Hoisting elements included.
· Detachable top cover.
· Stuffing box cover for cable input depending on installation needs.
· With silentblock.

TTD SERIES

Isolation · Input **400 V** · Output **230 V** + N

Technical features - standard model

Standard voltage	**Input 400 V // Output 230 V y N.**
Standard frequency	**50-60 Hz**
Connection unit	**Yyn0**
Windings	**Class HC-200 ºC**
Insulators	**Class F - 155 ºC ≤ 31,5 kVA (25 kVA TTZ)** **Class H - 180 ºC ≥ 40 kVA (31,5 kVA TTZ)** *More information in Technical Appendix (T.A.1)
Safety class	**I**
Altitude	**1000 m**
Enclosure colour	**RAL 7035**
IP rating	**IP00 (TTX)** **IP23 (TTW)** **IP54 / 65 (TTZ)**
IK rating	**IK08 (TTW)** **IK10 (TTZ)**
Paint class (ISO 12944)	**C3 (TTW)** **C4 (TTZ)**
Room temperature	**45 ºC**
Standards	**IEC/EN 61558, CE hasta 31,5 kVA** **IEC/EN 60076, CE a partir de 40 kVA**
Test voltage	**3 kV (1 min, 50 Hz)**
Inrush	**< 12 In**
Ucc	**≤ 4 %**
K factor	**4**
Operation	**Continuous**
Cooling	**AN (TTDX) - ANAN (TTDW / TTDZ)**
Hoisting accessories	Hoisting elements included.

Electrical diagram

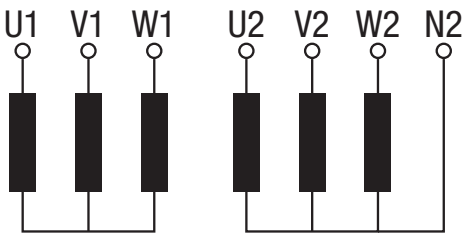

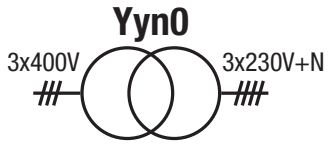

Theoretical data - standard model

Power kVA	Reference	Insulation class	Current A		Protections A		Noise dB	Cable gland	
			Input	Output	Input	Output		ø max. (mm)	Quantity
TTUX									
0,63	**TTDX0.63**	F	0,9	1,6	2 (D/aM)	1,6 (C/gG)	≤45	-	-
1	**TTDX1**	F	1,4	2,5	3 (D/aM)	2,5 (C/gG)	≤45	-	-
2	**TTDX2**	F	2,9	5,0	6 (D/aM)	5 (C/gG)	≤45	-	-
2,5	**TTDX2.5**	F	3,6	6,3	6 (D/aM)	6,3 (C/gG)	≤45	-	-
3,15	**TTDX3.15**	F	4,6	7,9	10 (D/aM)	8 (C/gG)	≤45	-	-
4	**TTDX4**	F	5,8	10,0	10 (D/aM)	10 (C/gG)	≤45	-	-
5	**TTDX5**	F	7,2	12,6	16 (D/aM)	12 (C/gG)	≤45	-	-
6,3	**TTDX6.3**	F	9,1	15,8	20 (D/aM)	16 (C/gG)	≤45	-	-
8	**TTDX8**	F	11,6	20,1	25 (D/aM)	20 (C/gG)	≤45	-	-
10	**TTDX10**	F	14,5	25,1	32 (D/aM)	25 (C/gG)	≤45	-	-
12,5	**TTDX12.5**	F	18,1	31,4	32 (D/aM)	30 (C/gG)	≤45	-	-
16	**TTDX16**	F	23,1	40,2	40 (D/aM)	40 (C/gG)	≤45	-	-
20	**TTDX20**	F	28,9	50,2	50 (D/aM)	50 (C/gG)	≤45	-	-
25	**TTDX25**	F	36,1	62,8	63 (D/aM)	60 (C/gG)	≤45	-	-
31,5	**TTDX31.5**	F	45,5	79,1	80 (D/aM)	80 (C/gG)	≤45	-	-
40	**TTDX40**	H	57,8	100	100 (D/aM)	100 (C/gG)	≤55	-	-
50	**TTDX50**	H	72,3	126	125 (D/aM)	100 (C/gG)	≤55	-	-
63	**TTDX63**	H	91	158	160 (D/aM)	160 (C/gG)	≤55	-	-
80	**TTDX80**	H	116	201	200 (D/aM)	200 (C/gG)	≤55	-	-
100	**TTDX100**	H	145	251	250 (D/aM)	250 (C/gG)	≤55	-	-
125	**TTDX125**	H	181	314	400 (D/aM)	300 (C/gG)	≤55	-	-
160	**TTDX160**	H	231	402	500 (D/aM)	400 (C/gG)	≤55	-	-
200	**TTDX200**	H	289	502	630 (D/aM)	500 (C/gG)	≤55	-	-
250	**TTDX250**	H	361	628	800 (D/aM)	600 (C/gG)	≤65	-	-
315	**TTDX315**	H	455	791	1000 (--/aM)	800 (C/gG)	≤65	-	-
400	**TTDX400**	H	578	1004	1250 (--/aM)	1000 (C/gG)	≤65	-	-
500	**TTDX500**	H	723	1255	1500 (--/aM)	1200 (C/gG)	≤65	-	-
630	**TTDX630**	H	910	1581	2000 (--/aM)	1500 (C/gG)	≤65	-	-
800	**TTDX800**	H	1156	2008	2500 (--/aM)	2000 (C/gG)	≤65	-	-
1000	**TTDX1000**	H	1445	2510	3000 (--/aM)	2500 (C/gG)	≤65	-	-

TTD SERIES

Isolation · Input **400 V** · Output **230 V** + N

Theoretical data - standard model

Power kVA	Reference	Insulation class	Current A		Protections A		Noise dB	Cable gland	
			Input	Output	Input	Output		ø max. (mm)	Quantity
TTUW									
0,63	**TTDW0.63**	F	0,9	0,9	2 (D/aM)	1 (C/gG)	≤45	14	2
1	**TTDW1**	F	1,4	1,4	3 (D/aM)	1.6 (C/gG)	≤45	14	2
2	**TTDW2**	F	2,9	2,9	6 (D/aM)	3 (C/gG)	≤45	14	2
2,5	**TTDW2.5**	F	3,6	3,6	6 (D/aM)	3 (C/gG)	≤45	18	2
3,15	**TTDW3.15**	F	4,6	4,6	10 (D/aM)	4 (C/gG)	≤45	18	2
4	**TTDW4**	F	5,8	5,8	10 (D/aM)	5 (C/gG)	≤45	18	2
5	**TTDW5**	F	7,2	7,2	16 (D/aM)	6 (C/gG)	≤45	18	2
6,3	**TTDW6.3**	F	9,1	9,1	20 (D/aM)	10 (C/gG)	≤45	25	4
8	**TTDW8**	F	11,6	11,6	25 (D/aM)	12 (C/gG)	≤45	25	4
10	**TTDW10**	F	14,5	14,5	32 (D/aM)	16 (C/gG)	≤45	32	4
12,5	**TTDW12.5**	F	18,1	18,1	32 (D/aM)	16 (C/gG)	≤45	32	4
16	**TTDW16**	F	23,1	23,1	40 (D/aM)	20 (C/gG)	≤45	32	4
20	**TTDW20**	F	28,9	28,9	50 (D/aM)	25 (C/gG)	≤45	32	4
25	**TTDW25**	F	36,1	36,1	63 (D/aM)	32 (C/gG)	≤45	32	4
31,5	**TTDW31.5**	F	45,5	45,5	80 (D/aM)	40 (C/gG)	≤45	32	4
40	**TTDW40**	H	57,8	57,8	100 (D/aM)	50 (C/gG)	≤55	32	8
50	**TTDW50**	H	72,3	72,3	125 (D/aM)	63 (C/gG)	≤55	32	8
63	**TTDW63**	H	91	91	160 (D/aM)	80 (C/gG)	≤55	32	8
80	**TTDW80**	H	116	116	200 (D/aM)	100 (C/gG)	≤55	32	8
100	**TTDW100**	H	145	145	250 (D/aM)	125 (C/gG)	≤55	32	8
125	**TTDW125**	H	181	181	400 (D/aM)	160 (C/gG)	≤55	44	8
160	**TTDW160**	H	231	231	500 (D/aM)	200 (C/gG)	≤55	44	8
200	**TTDW200**	H	289	289	630 (D/aM)	250 (C/gG)	≤55	44	8
250	**TTDW250**	H	361	361	800 (D/aM)	300 (C/gG)	≤65	44	8
315	**TTDW315**	H	455	455	1000 (--/aM)	400 (C/gG)	≤65	44	8
400	**TTDW400**	H	578	578	1250 (--/aM)	500 (C/gG)	≤65	44	8
500	**TTDW500**	H	723	723	1500 (--/aM)	630 (C/gG)	≤65	44	8
630	**TTDW630**	H	910	910	2000 (--/aM)	800 (C/gG)	≤65	44	8
800	**TTDW800**	H	1156	1156	2500 (--/aM)	1000 (C/gG)	≤65	44	8
1000	**TTDW1000**	H	1445	1445	3000 (--/aM)	1250 (C/gG)	≤65	44	8
TTUZ									
0,63	**TTDZ0.63**	F	0,9	0,9	2 (D/aM)	1 (C/gG)	≤45	10 - 14	2
1	**TTDZ1**	F	1,4	1,4	3 (D/aM)	1.6 (C/gG)	≤45	10 - 14	2
2	**TTDZ2**	F	2,9	2,9	6 (D/aM)	3 (C/gG)	≤45	10 - 14	2
2,5	**TTDZ2.5**	F	3,6	3,6	6 (D/aM)	3 (C/gG)	≤45	18 - 25	2
3,15	**TTDZ3.15**	F	4,6	4,6	10 (D/aM)	4 (C/gG)	≤45	18 - 25	2
4	**TTDZ4**	F	5,8	5,8	10 (D/aM)	5 (C/gG)	≤45	18 - 25	2
5	**TTDZ5**	F	7,2	7,2	16 (D/aM)	6 (C/gG)	≤45	18 - 25	2
6,3	**TTDZ6.3**	F	9,1	9,1	20 (D/aM)	10 (C/gG)	≤45	18 - 25	2
8	**TTDZ8**	F	11,6	11,6	25 (D/aM)	12 (C/gG)	≤45	18 - 25	2
10	**TTDZ10**	F	14,5	14,5	32 (D/aM)	16 (C/gG)	≤45	22 - 32	2
12,5	**TTDZ12.5**	F	18,1	18,1	32 (D/aM)	16 (C/gG)	≤45	22 - 32	2
16	**TTDZ16**	F	23,1	23,1	40 (D/aM)	20 (C/gG)	≤45	22 - 32	2
20	**TTDZ20**	F	28,9	28,9	50 (D/aM)	25 (C/gG)	≤45	22 - 32	2
25	**TTDZ25**	F	36,1	36,1	63 (D/aM)	32 (C/gG)	≤45	22 - 32	2
31,5	**TTDZ31.5**	F	45,5	45,5	80 (D/aM)	40 (C/gG)	≤45	22 - 32	2
40	**TTDZ40**	H	57,8	57,8	100 (D/aM)	50 (C/gG)	≤55	22 - 32	2
50	**TTDZ50**	H	72,3	72,3	125 (D/aM)	63 (C/gG)	≤55	22 - 32	2
63	**TTDZ63**	H	91	91	160 (D/aM)	80 (C/gG)	≤55	22 - 32	2
80	**TTDZ80**	H	116	116	200 (D/aM)	100 (C/gG)	≤55	22 - 32	2
100	**TTDZ100**	H	145	145	250 (D/aM)	125 (C/gG)	≤55	22 - 32	2
125	**TTDZ125**	H	181	181	400 (D/aM)	160 (C/gG)	≤55	34 - 44	2
160	**TTDZ160**	H	231	231	500 (D/aM)	200 (C/gG)	≤55	34 - 44	2
200	**TTDZ200**	H	289	289	630 (D/aM)	250 (C/gG)	≤55	34 - 44	2
250	**TTDZ250**	H	361	361	800 (D/aM)	300 (C/gG)	≤65	34 - 44	2
315	**TTDZ315**	H	455	455	1000 (--/aM)	400 (C/gG)	≤65	34 - 44	2
400	**TTDZ400**	H	578	578	1250 (--/aM)	500 (C/gG)	≤65	34 - 44	2
500	**TTDZ500**	H	723	723	1500 (--/aM)	630 (C/gG)	≤65	34 - 44	2
630	**TTDZ630**	H	910	910	2000 (--/aM)	800 (C/gG)	≤65	34 - 44	2
800	**TTDZ800**	H	1156	1156	2500 (--/aM)	1000 (C/gG)	≤65	34 - 44	2
1000	**TTDZ1000**	H	1445	1445	3000 (--/aM)	1250 (C/gG)	≤65	34 - 44	2

TTD SERIES

Isolation · Input **400 V** · Output **230 V** + N

Measurements

Power kVA	Reference	External dimensions mm			Fastening elements mm			Weight kg
		A	B	C	D	E	Ø	
TTUX								
0,63	**TTDX0.63**	150	94	178	66	125	6	5,9
1	**TTDX1**	180	94	203	76	150	6	9,5
2	**TTDX2**	240	145	253	125	200	9	20
2,5	**TTDX2.5**	300	124	303	115	250	9	23,9
3,15	**TTDX3.15**	300	134	303	125	250	9	27,4
4	**TTDX4**	300	154	303	145	250	9	36
5	**TTDX5**	300	164	303	155	250	9	40,4
6,3	**TTDX6.3**	360	144	353	122	300	11	55
8	**TTDX8**	360	164	353	142	300	11	67
10	**TTDX10**	420	170	419	136	350	11	78
12,5	**TTDX12.5**	420	190	419	156	350	11	94
16	**TTDX16**	480	250	480	144	400	11	105
20	**TTDX20**	480	270	480	164	400	11	125
25	**TTDX25**	480	290	480	184	400	11	145
31,5	**TTDX31.5**	480	310	480	204	400	11	162
40	**TTDX40**	670	280	615	170	426	13	191
50	**TTDX50**	670	300	615	190	426	13	233
63	**TTDX63**	670	320	690	210	426	13	277
80	**TTDX80**	670	340	690	230	426	13	320
100	**TTDX100**	670	360	690	250	426	13	368
125	**TTDX125**	785	550	880	460	472	17	462
160	**TTDX160**	785	550	880	460	472	17	560
200	**TTDX200**	785	550	880	460	472	17	660
250	**TTDX250**	1016	550	1080	460	690	17	808
315	**TTDX315**	1070	550	1220	460	690	17	1000
400	**TTDX400**	1070	550	1220	460	690	17	1092
500	**TTDX500**	1300	550	1350	460	800	17	1658
630	**TTDX630**	1300	600	1350	460	800	17	2000
800	**TTDX800**	1300	700	1350	600	800	17	2413
1000	**TTDX1000**	1300	800	1350	600	800	17	2993

Power kVA	Reference	External dimensions mm			Fastening elements mm			Weight kg
		A	B	C	D	E	Ø	
TTUW								
0,63	**TTDW0.63**	194	175	220	165	100	6	7,6
1	**TTDW1**	240	190	250	180	150	6	13,2
2	**TTDW2**	315	230	315	205	200	6	24,8
2,5	**TTDW2.5**	385	260	384	245	250	6	28,8
3,15	**TTDW3.15**	385	260	384	245	250	6	32,8
4	**TTDW4**	385	260	384	245	250	6	40,8
5	**TTDW5**	385	260	384	245	250	6	45,2
6,3	**TTDW6.3**	458	340	500	300	300	12	61
8	**TTDW8**	458	340	500	300	300	12	73
10	**TTDW10**	528	418	644	375	345	12	89
12,5	**TTDW12.5**	528	418	644	375	345	12	106
16	**TTDW16**	597	415	710	375	345	12	117
20	**TTDW20**	597	415	710	375	345	12	137
25	**TTDW25**	597	415	710	375	345	12	157
31,5	**TTDW31.5**	597	415	710	375	345	12	174
40	**TTDW40**	795	550	970	500	415	12	237
50	**TTDW50**	795	550	970	500	415	12	279
63	**TTDW63**	795	550	970	500	415	12	323
80	**TTDW80**	795	550	970	500	415	12	366
100	**TTDW100**	795	550	970	500	415	12	414
125	**TTDW125**	970	670	1250	582	470	18	514
160	**TTDW160**	970	670	1250	582	470	18	612
200	**TTDW200**	970	670	1250	582	470	18	754
250	**TTDW250**	1200	760	1555	672	690	18	855
315	**TTDW315**	1200	760	1555	672	690	18	1093
400	**TTDW400**	1200	760	1555	672	690	18	1185
500	**TTDW500**	1530	1000	1880	900	800	20	1808
630	**TTDW630**	1530	1000	1880	900	800	20	2149
800	**TTDW800**	1530	1000	1880	900	800	20	2563
1000	**TTDW1000**	1530	1000	1880	900	800	20	3143

TTDX IP00

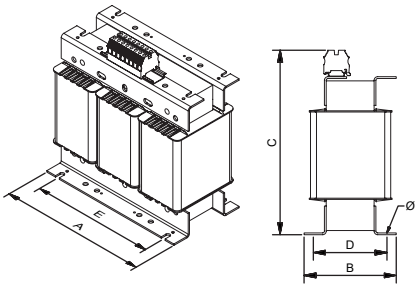

From 0,63 kVA to 12,5 kVA

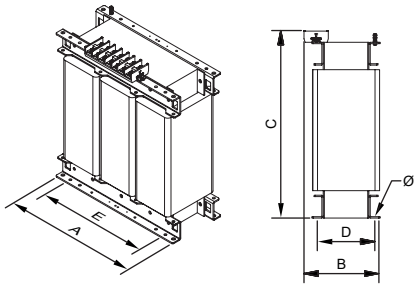

From 16 kVA to 200 kVA

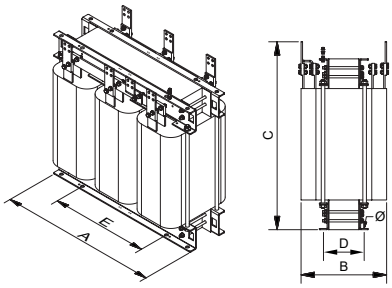

From 250 kVA

TTDW IP23

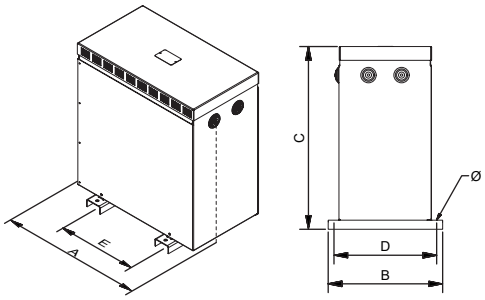

From 0,63 kVA to 31,5 kVA

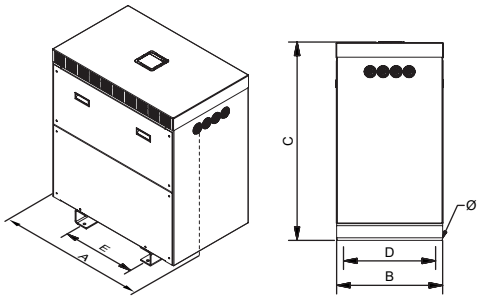

From 40 kVA

Sectioned

+ info. www.polylux.com
POLYLUX Information is subject to change

TTD SERIES

Isolation · Input **400 V** · Output **230 V** + N

Measurements

Power kVA	Reference	External dimensions mm			Fastening elements mm			Weight kg
		A	B	C	D	E	Ø	
TTUZ								
0,63	**TTDZ0.63**	330	284	463	230	200	11	19,5
1	**TTDZ1**	330	284	463	230	200	11	24
2	**TTDZ2**	510	362	689	320	250	11	37
2,5	**TTDZ2.5**	510	362	689	320	250	11	40
3,15	**TTDZ3.15**	510	362	689	320	250	11	57
4	**TTDZ4**	510	362	689	320	250	11	61
5	**TTDZ5**	510	362	689	320	250	11	76
6,3	**TTDZ6.3**	510	362	689	320	250	11	87,5
8	**TTDZ8**	694	413	764	370	350	11	118
10	**TTDZ10**	694	413	764	370	350	11	134
12,5	**TTDZ12.5**	694	413	764	370	350	11	145
16	**TTDZ16**	694	413	764	370	350	11	165
20	**TTDZ20**	694	413	764	370	350	11	185
25	**TTDZ25**	694	413	764	370	350	11	202
31,5	**TTDZ31.5**	694	413	764	370	350	11	220
40	**TTDZ40**	890	560	1148	520	426	13	251
50	**TTDZ50**	890	560	1148	520	426	13	295
63	**TTDZ63**	890	560	1148	520	426	13	340
80	**TTDZ80**	890	560	1148	520	426	13	383
100	**TTDZ100**	890	560	1148	520	426	13	433
125	**TTDZ125**	972	740	1480	660	470	17	551
160	**TTDZ160**	972	740	1480	660	470	17	628
200	**TTDZ200**	972	740	1480	660	470	17	797
250	**TTDZ250**	1394	870	1762	810	690	17	1186
315	**TTDZ315**	1394	870	1762	810	690	17	1278
400	**TTDZ400**	1394	870	1762	810	690	17	1933
500	**TTDZ500**	1640	1226	1770	1110	800	17	2275
630	**TTDZ630**	1640	1226	1770	1110	800	17	2688
800	**TTDZ800**	1640	1226	1770	1110	800	17	3268
1000	**TTDZ1000**	1640	1226	1770	1110	800	17	3848

TTDZ IP54 / 65

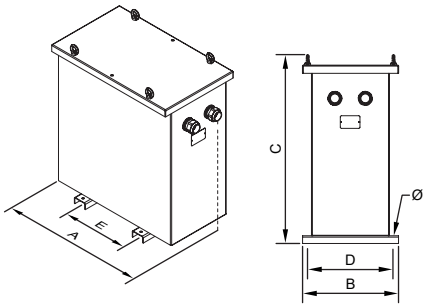

TTD SERIES

Isolation · Input **400 V** · Output **230 V** + N

On-request manufacturing options (please see prices)

Power	**From 0.15 kVA to 1000 kVA**
Voltage	**From 1 V to 12 kV**
Windings	**Copper or aluminium**
Frequency	**From 50 Hz to 400 Hz**
Connection unit	**Yyn0, Dyn11, Dd0, Dy1, Dyn5, YNd1/5/11... (See Technical Appendix T.A.2)**
IP rating	**IP00, IP20, IP23, IP31, IP42, IP54, IP55 and IP65**
IK rating	**IK08 and IK10**
Room temperature	**Up to 60 ºC**
Locks	**Screw, key**
Test voltage	**Up to 28 kV**
Short circuit voltage	**From 2% to 9%**
Losses	**Low losses, ecological**
Operation	**Intermittent, continuous**
Cooling	**Natural, forced ventilation**
Electrostatic shield	**Up to three shields**
Safety class	**I, II**
Altitude	**Up to 4000 m**
Protections	**In both primary and secondary (figure 1)**
Temperature sensors	**PT100 (figure 2), PTC (figure 3) or bimetallic**
Temperature control	**Temperature control station (4xPT100) (figure 4), PTC thermal relays (3xPTC / 6xPTC)**
Network analyser	**(Figure 5)**
Anti condensation system	**Higrostat**
Heating system	**Heating elements**
External protection	**Anti-flash varnish, resin encapsulated, metal or stainless steel enclosure**
Transportation and hoisting	**Wheels (figure 6), lifting points**
Paint	**C3, C4, C5, different RAL**
Feature plate	**High generation polymer or stainless steel (figure 7)**
Anti vibration system	**Silentblock**
Adjustment	**-10%; -7.5%; -5%; -2.5%; +2.5%; +5%; +7.5%; +10% With bridges (figure 8) or selector (figure 9)**
Certified	**CE, DNV-GL, BV, UL (insulation) and POLYLUX laboratory**
Climate class / environment / fire	**Up to C2-E2-F1**

Figure 1

Figure 2

Figure 3

Figure 4

Figure 5

Figure 6

Figure 7

Figure 8

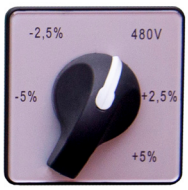

Figure 9

TTD SERIES

Isolation · Input **400 V** · Output **230 V** + N

Plastic label up to 31,5 kVA:

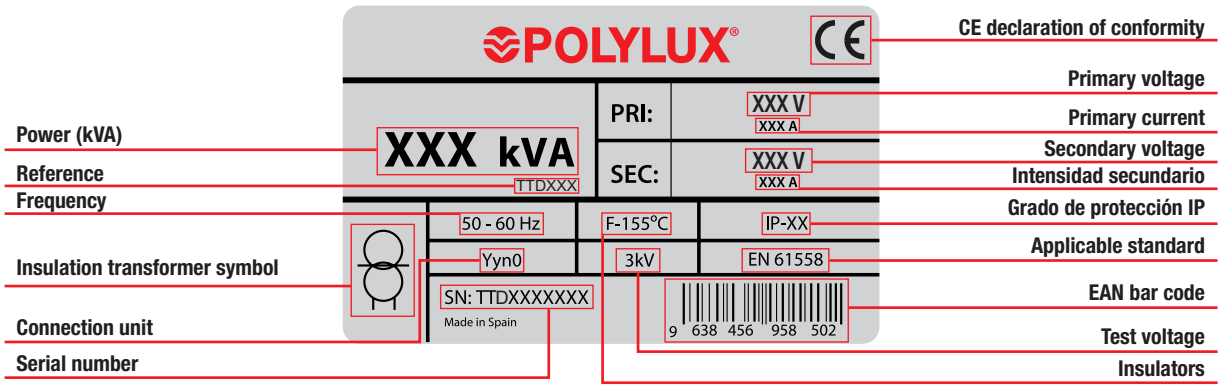

Stainless steel label from 40 kVA:

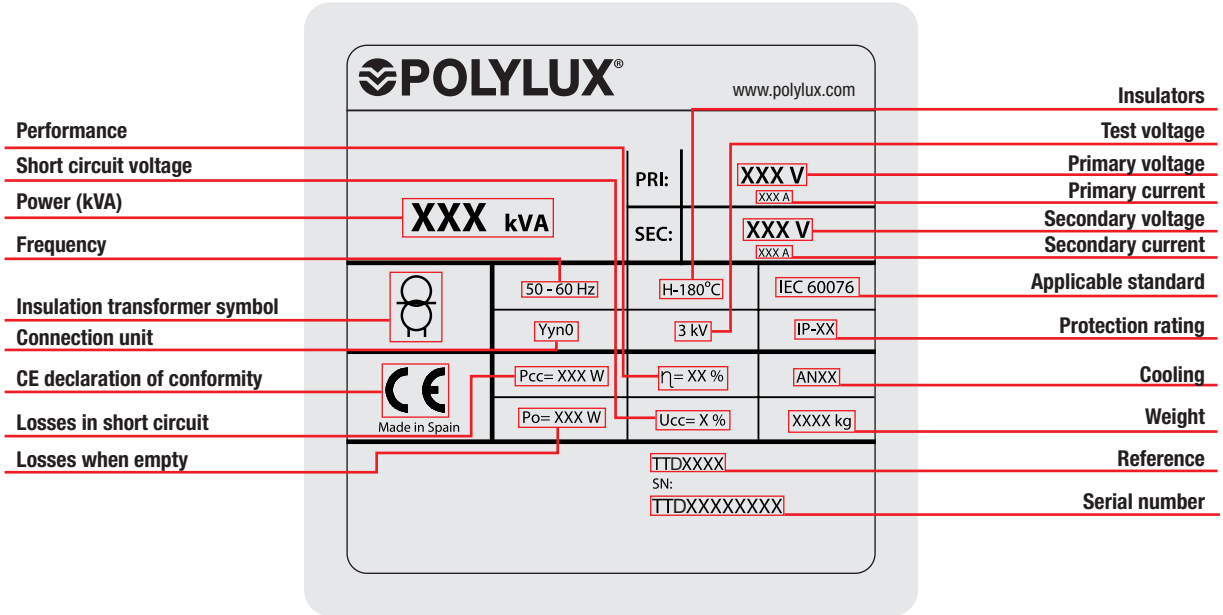

POLYLUX®

Avda. de Roma, 18-26
08290 CERDANYOLA DEL VALLÈS
Barcelona · (Spain)
Tel. +34 93 692 65 65 · Fax +34 93 580 96 03
polylux@polylux.com

www.polylux.com