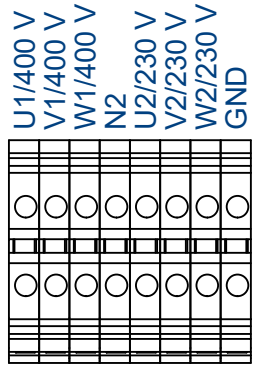

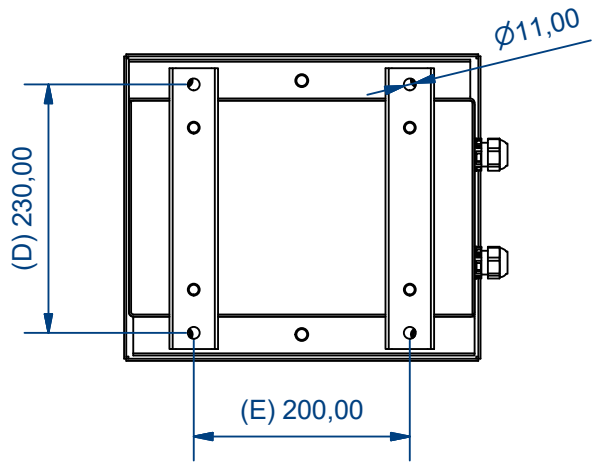

(1/10)

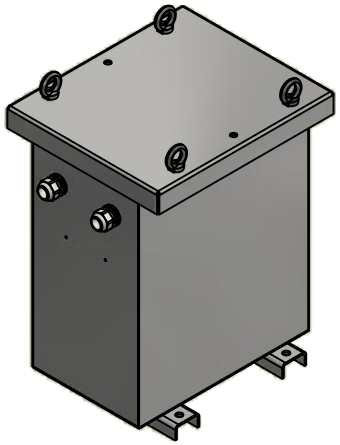

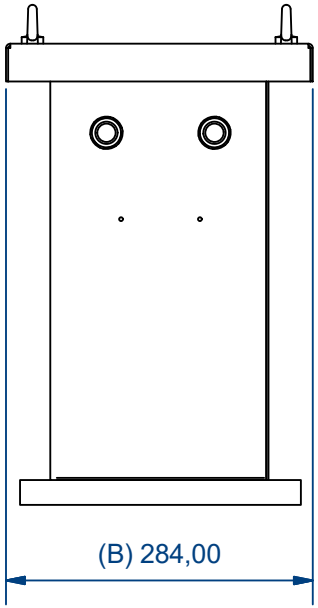

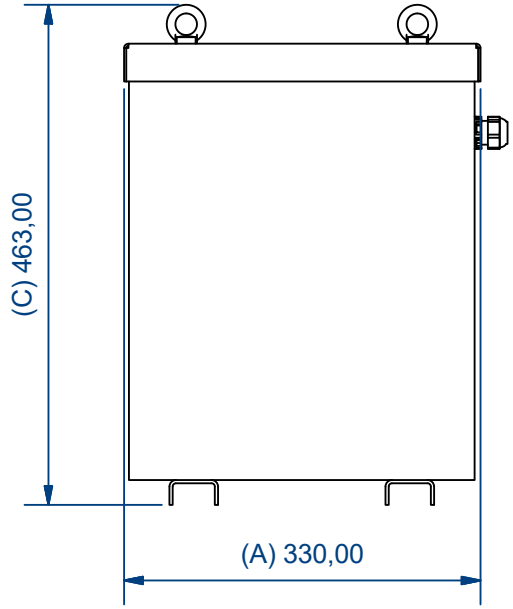

YN0

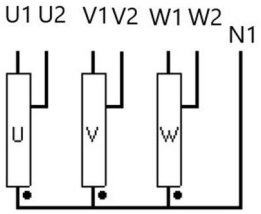

Characteristics									
IP	Vector Group	Rated power	Voltage Pri.	In Pri.	Pri. Connection	Voltage Sec.	In Sec.	Sec. Connection	Ground connection
54	YN0	1 kVA	400 V	1,44 A	Terminal wire up to 6 mm2	230 V	2,51 A	Terminal wire up to 6 mm2	Terminal wire up to 6 mm2

Drawn by: OPS-03/01/2024	Modified by: -	Approved by: AMR-03/01/2024	Replaces: PE.C.NOR.AUTZ1.V01	Material:	Surface treatment: N/D	Weight: N/D	Valid: Yes
POLYLUX		Description: AUTZ1 Drawing				Units: mm	Directory:
Drawing reference: PE.C.NOR.AUTZ1.V02		ERP reference: AUTZ1	Distributed to:	Technical D. / Commercial D.	Customers	Scale: 1 / 7	Page: 1 / 1