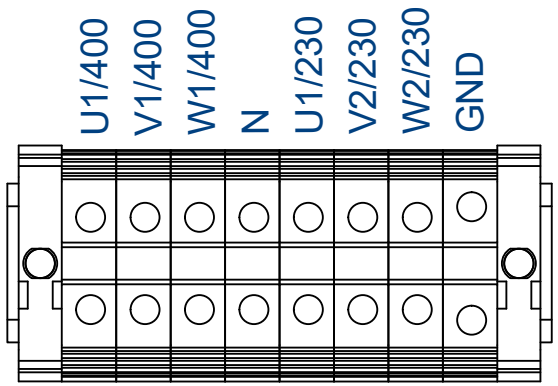

Connexion (3/5)

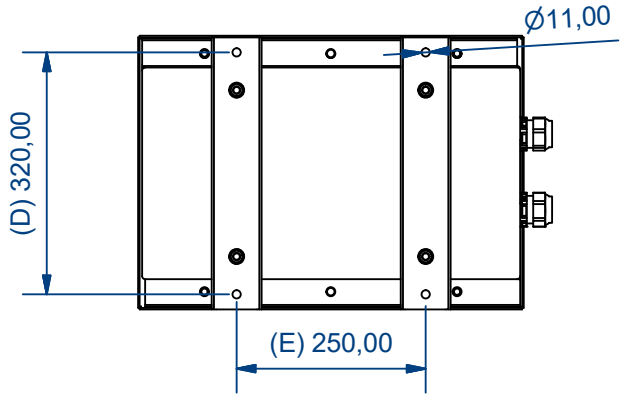

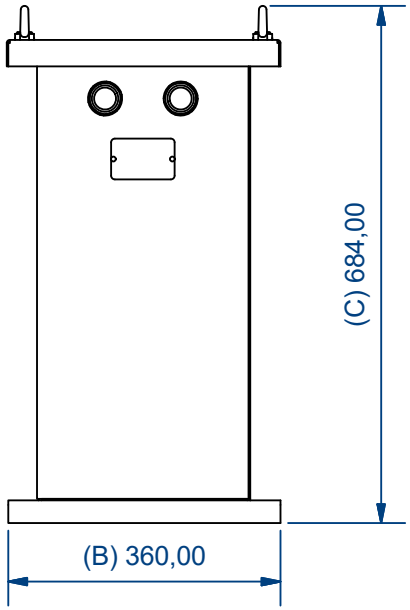

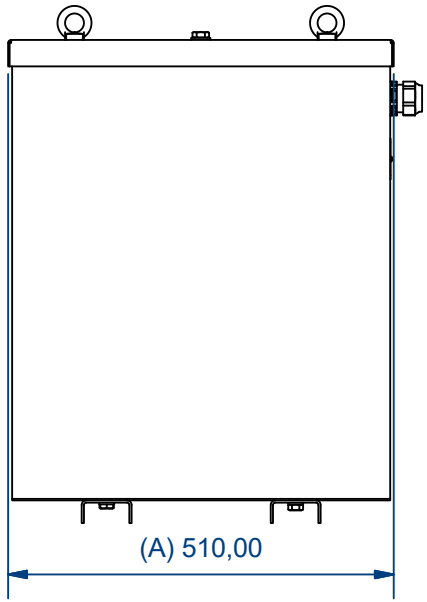

(1/13)

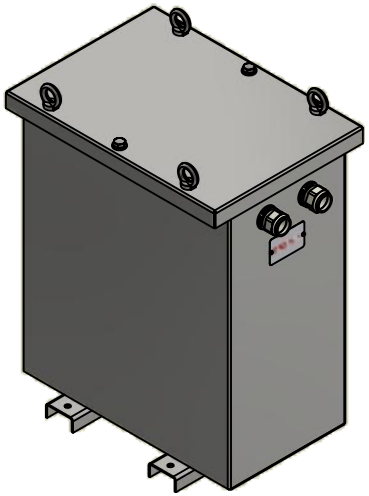

YN0

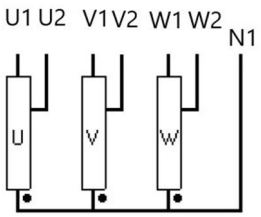

Characteristics									
IP	Vector Group	Rated power	Voltage Pri.	In Pri.	Pri. Connection	Voltage Sec.	In Sec.	Sec. Connection	Ground connection
54	YN0	12,5 kVA	400 V	18,04 A	Terminal wire up to 16 mm2	230 V	31,38 A	Terminal wire up to 16 mm2	Terminal wire up to 16 mm2

Drawn by: OPS-04/01/2024	Modified by: -	Approved by: AMR-16/03/2023	Replaces: -	Material:	Surface treatment: N/D	Weight: N/D	Valid: Yes
POLYLUX		Description: AUTZ12,5 Drawing				Units: mm	Directory:
Drawing reference: PE.C.NOR.AUTZ12,5.V01		ERP reference: AUTZ12,5	Distributed to:	Technical D. / Commercial D.	Customers	Scale: 1 /10	Page: 1 / 1